Attachment table 11 the telescopic-materials-handler lift- truck or the straddle lift- truck

Test items	1	2	3	4	5	6	7	8
stability divisions	front stability		left- right stability			rear stability		
state of stability test	stillness	running	stillness		running	stillness		running
load	load	load	load	no-load	no-load	load	no-load	no-load
fork lift	highest	fig.2 fig 3	highest	highest	fig.2 fig 3	highest	highest	fig.2 fig 3
extension- retract degree (telescopic-materials-handler lift- truck)	extension	retract	retract	retract	retract	retract	retract	retract
tilt of mast or fork	verticle	max. backward tilt	worst state of stability					
tilt of platform	4%	18%	6%	8%	fig. 4	14%	single rear wheel braking 14% multi- rear wheel braking 18%	fig.5
lift- truck posision on the platform	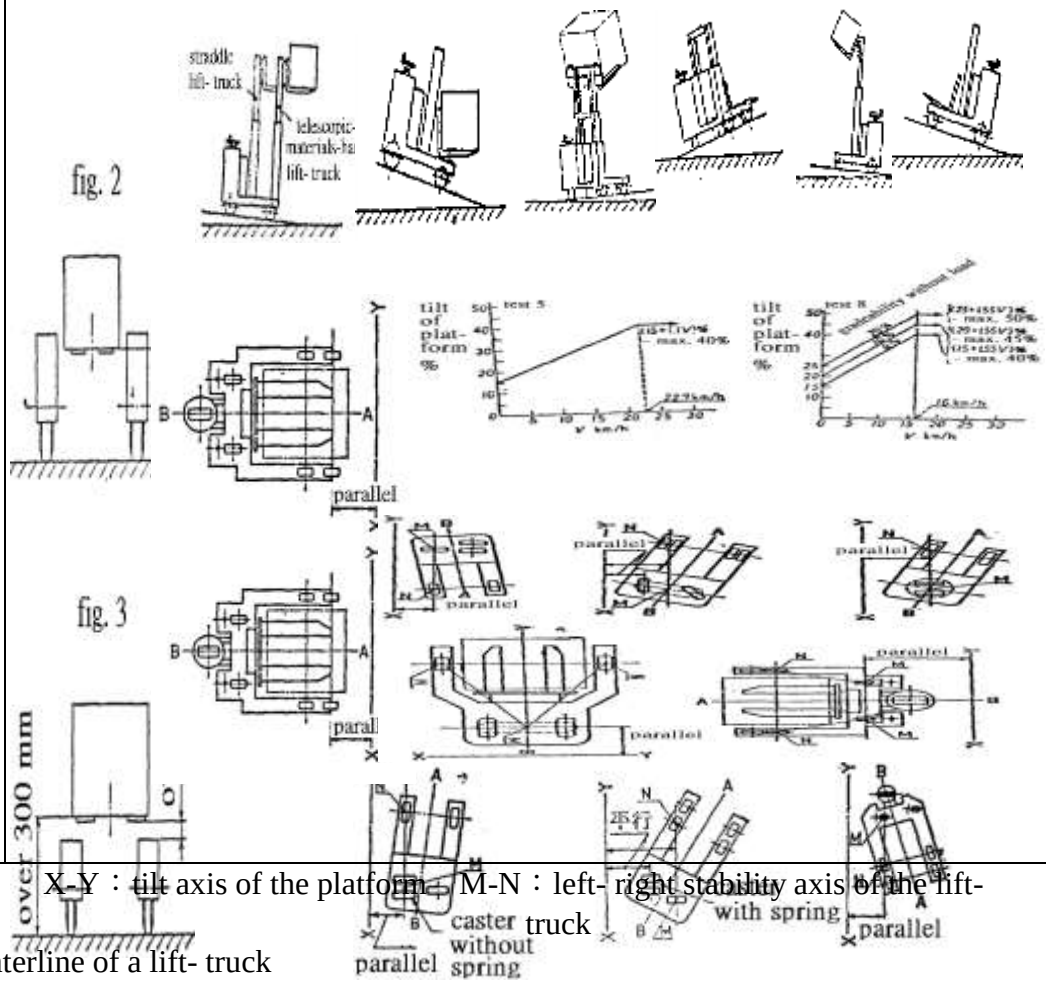							

V：max. speed(km/h)， X-Y：tilt axis of the platform， M-N：left- right stability axis of the lift- truck

A-B： longitudinal centerline of a lift- truck